To appear in *Proceedings of WECOL 2004*, Cascadilla Press

Event-Path Homomorphism and the Accompanied-Motion Reading in Motion Causatives

Raffaella Folli & Heidi Harley
University of Cambridge & University of Arizona

1. Introduction: Structures and Meanings of Motion Verbs

English motion verbs occur in a number of different frames. They can be intransitive (with or without adjuncts, such as a locative PP), intransitive with a Goal PP, or transitive (causative) with a Goal PP. This last point has been discussed at length in the literature, and the connection between the availability of the causative and the presence of the goal PP has been considered strong evidence for the existence of tight connection between telicity and transitivity.

(1) a. Mary walked (in the house)
b. Mary walked to the house.
c. Mary walked Bill *(to the house).

Nevertheless a number of properties restrict the formation of such alternations with a motion verb.

First, not all verbs are compatible with a causative form as shown by the verb *to shudder* in the example below:

(2) a. The train shuddered into the station.
b. *Bill shuddered the shopping cart across the parking lot.

Second, the formation of a causative frame with motion verbs is subject in certain cases to an extra requirement which we will refer to as the accompanied-motion requirement:

(3) a. John walked Bill to the house.
b. Mary whistled the dog to the house

In (3)a John's walking has to last all the way to the house, while in (3)b such requirement is not present, as the whistling event can entirely precede the travel.

Third, English verbs compatible with the (c) structure can differ with respect to whether or not they require their subject to be intentional:

(4) a. The tide rolled the log up the beach.
b. #The wind walked the dog into the house.

Finally, with verbs which don't require their subject to be intentional in the (c) structure, the accompanied-motion requirement is not present and so in (5) *Bill* doesn't have to go along with *the ball.*

(5) Bill rolled the ball to the baby

In this paper, we will investigate the relationships between the meanings of the structures and the semantic content of the verbs with the aim of explaining the above constellation of facts and in particular the accompanied-motion requirement. Developing arguments put forward in Folli and Harley (2002), we will argue that the availability of the causative form in (1)c is tightly related the presence of a secondary predicate allowing the projection of a SC and not to the telicity of the PP.

2. Goal-of-Motion Requires Small Clause, not Telicity

Following Hale and Keyser (1993) and Hoekstra and Mulder (1990) (among others), we assume that (1)a-c have the following structures[i]:

(6) a.

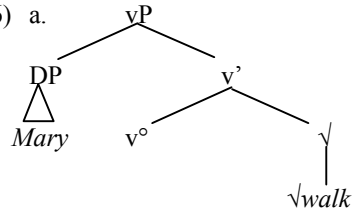

b.

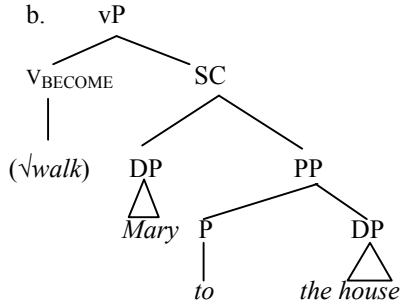

c.

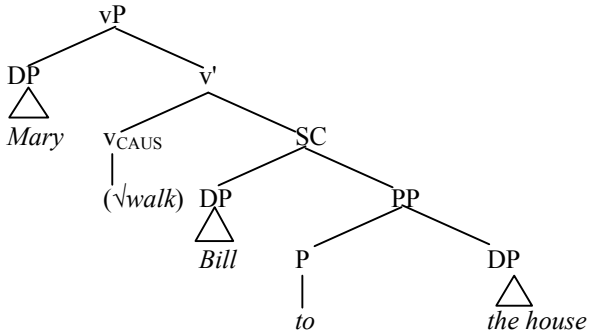

Although it is difficult to argue for an unaccusative analysis of the (b) structures in English, languages like Dutch (Hoekstra & Mulder 1990) and Italian (Folli 2001) provide evidence for this hypothesis because the presence of the PP is necessary to get the resultative interpretation and the auxiliary selected is the one typically selected with unaccusative verbs:

(7) a. Jan is/*heeft *(in der sloot gesprongen).
John is/*has in the ditch jumped.
'John jumped in the ditch.'
b. Gianni é/*ha corso *(nel bosco).
Gianni is run into.the woods
'John ran into the woods.'

On the other hand, in Italian a prepositional phrase headed by *nel* 'in' can be used in conjunction with *avere* in a sentence like *Gianni ha corso nel bosco per due ore* (John has run in the woods for two hours). In this case the Locative PP is optional and the auxiliary selected is the one typically used in unergative/activity-like structures.[ii] We argue that the difference between a Locative PP and a Path PP is reflected structurally, with the first being an adjunct to vP, hence optional, and the second being the secondary predicate of the small clause, hence a proper argument within vP. Evidence for this distinction can be found by performing a series of tests (adapted from Tungseth 2004):

(8) *Switching the order of a Goal PP and a Location PP worse than switching two Location PPs*
a. Sue danced to the bathroom at the party.
b. ??Sue danced at the party to the bathroom.
c. Sue danced at the party in the bathroom.
d. Sue danced in the bathroom at the party.

(9) *Temporal adverb intervening between V and Goal PP worse than adverb intervening between V and Location PP*
a. Sue danced at the party for hours/ for hours at the party.
b. Sue walked to the bathroom in a minute /??in a minute to the bathroom[iii].

(10) *Do-so elision of vP wants to include PP args and Goal PPs, but not Location PPs*[iv]
a. Mary kissed John in the park and Sue did so in the bedroom.
b. ??Sue gave a book to John and Mary did so to Bill.
c. ??Sue danced to the bathroom and Mary did so to the kitchen.

Moreover,Zubizarreta and Oh (2004:62 n. 7) suggest that the weak-island argument-adjunct extraction asymmetry points in this direction too:

(11) *Argument extraction from weak islands better than adjunct extraction*
a. *When$_i$ do you wonder whether Snow White will eat an apple t_i ?
b. ? What$_i$ do you wonder whether Snow White will eat t_i on Thursday?

(12) *Goal PP extraction better than location PP extraction from weak islands*
a. *[At which party]$_i$ do you wonder whether Sue will dance t_i ?
b. ?[To which house]$_i$ do you wonder whether Sue will walk t_i ?

Finally,Bresnan (1992) notes that locative inversion is possible for verbs of motion with Goal PPs but not Location PPs in these constructions. Since

locative inversion is movement to an A-position, it should be good for arguments but not adjuncts:

(13) *Locative inversion only good with Goal PP*

a. *At the party danced a smiling girl.

b. Into the room danced a smiling girl.

In conclusion, with most of the literature, we think that the above tests provide strong arguments in favor of the vP-interior nature of the goal PP.

2.1 Unbounded causatives

Folli and Harley (2002) and Zubizarreta and Oh (2004) note that accounts which connect the licensing of the unaccusative structures in (6)b to telicity per se cannot be correct.[v] F&H make the same point for the causative structures in (6)c. If we replace the telicity-inducing *to* P in a causative like (6)c with an unbounded directional P like *towards*, *along* or *around*, the causative structure is still licensed:

(14) a. John waltzed Matilda around and around the room for hours.

b. John walked Mary along the river all afternoon.

c. John ran the dog up and down the path for hours

d. John jumped the horse back and forth across the ditch for 30 minutes.

Similarly, in Dutch and Italian, the *be* auxiliary is licensed for goal PPs headed by unbounded directional Ps, indicating these PPs are still triggering the unaccusative structure, although they are atelic:

(15) a. Gianni é corso verso il bosco (per ore).
John is run towards the woods (for hours).
'John ran towards the woods.'

b. Gianni é scivolato in direzione della pianta.
J. is slid in the direction of the tree.
'John slid in the direction of the tree.'

c. Jan is naar het bos gerend.
Jan is towards the woods run.
'Jan ran towards the woods.'

In English, these atelic GoalPPs behave the same as their telic counterparts with respect to the tests for vP-internalness described above:

(16) *Switching the order of a Goal PP and a Location PP worse than switching two Location PPs*

a. Sue danced **around** the bathroom at the party.

b. ??Sue danced at the party **around** the bathroom.

c. Sue danced at the party in the bathroom.

d. Sue danced in the bathroom at the party.

(17) *Temporal adverb intervening between V and Goal PP worse than adverb intervening between V and Location PP*

a. Sue danced at the party for hours/ for hours at the party.

b. Sue danced around the room for hours/??for hours around the room.

(18) *Do-so elision of vP wants to include PP args and Goal PPs, but not Location PPs*

a. Mary kissed John in the park and Sue did so in the bedroom.

b. ??Sue gave a book to John and Mary did so to Bill.

c. ??Sue danced **around** the bathroom and Mary did so **around** the kitchen.

(19) *Goal PP extraction better than location PP extraction from weak islands*

a. *[At which party]$_i$ do you wonder whether Sue will dance t_i ?

b. ?[**Towards** which house]$_i$ do you wonder whether Sue will walk t_i ?

(20) *Locative inversion only good with Goal PP*

a. *At the party danced a smiling girl.

b. **Around** the room danced a smiling girl.

From this discussion we can conclude that structure is the crucial factor in allowing an unaccusative or causative of a manner of motion verb, not the telicity of the prepositional phrase involved. In general, we claim that the secondary predication introduced by the small clause involves a measuring out of the resultant event (Tenny 1987) and content of P head simply determines whether measuring-out results in a bounded, telic event or an unbounded, atelic event.[vi] Therefore semantic-mapping accounts based on identifying telic meanings cannot account for the data discussed in this section (though they could work for other English resultatives, see Wechsler 2001).

3. The Accompanied-Motion Requirement

We claim that the (late) insertion of verbs as the manner spell-out of *v* in structures like 6b and 6c depends on whether they can be related to the argument structure of the clause (see Harley 2005 for discussion of this treatment of manner incorporation). In a causative sentence of a manner of motion verb as *Mary walked Bill to the house* (cf. (6)c for its structure), the v° takes a SC as its complement and a Causer/Agent DP as its specifier. In the previous section we have argued that the SC represents the Path that measures-out the resultant event. More specifically, we wish to argue that verb roots can be (late) inserted into v° as manner elements, if their semantics involves either an Agent, a Path, or both. If neither an Agent nor a Path is part of the semantics of the root, the verb is incompatible with the causative motion construction. Conversely, when the semantics of the verb involves *both* an Agent and a Path, the accompanied-motion reading is forced.

More specifically, two extra semantic effect can identified by considering in turn the relevance of the Path and Agent components of manner verbs. First, the measuring-out effect of the Path on the resultant event means that, for a verb that selects a Path, the manner denoted by the verb has to extend for the entire temporal duration of the event. Second, if a verb selects for both a Path and an Agent, then the Agent also has to participate in the manner for the entire event.

This idea is based on Levin and Rappaport (1999)'s observation that the causing event and the result event in resultatives formed from transitive verbs must be cotemporaneous if the verb selects for the argument of which the result is predicated; the two events don't need to be cotemporaneous if the resultant argument is unselected (fake reflexive, *way*-construction, etc.)

(21) a. Mary danced out of the room.
(dancing and motion out of the room cotemporaneous)
b. Mary danced herself stiff.
(dancing may end well before onset of stiffness)

Notice that in these motion causatives, *all* the objects of which the results are predicated are unselected. The crucial factor is whether the Path (and Agent) is selected.

3.1 The four manner-of-motion verb classes

The verbs which can appear with a directional PP fall into four distinct categories defined by their Agent and Path implications. We've provided examples of each of the four types in Table 1.

(22) Table 1

	+Path	-Path
+Agent	walk, run, swim	whistle, hiss, sing
-Agent	roll, float, slide	shudder, tremble

The classification of verbs like *walk, run, swim, whistle, hiss* and *sing* as requiring an Agent (a teleologically capable doer of the action) should be uncontroversial.[vii]

Similarly, it is clear that *roll, float, slide, shudder* and *tremble* can be non-Agentive (e.g. *The tree shuddered when the axe struck it*).

More problematic might be the claim that *walk, run, swim, roll, float* and *slide,* unlike the other verbs in our table, select for a Path, since all of those verbs can occur with a directional Path PP:

(23) a. Mary walked to the store.
b. The log rolled along the beach.
c. The bullet whistled through the window.
d. The train shuddered into the station.

Crucially, even though all those verbs can occur with Path PP, and the tests used in section 2 confirm their occurrence in the same structural position, extraction data seem to suggest that a distinction can be drawn between verbs

that have a selectional relation with the Path PP and verbs that don't (Tenny 1995, Folli 2001):

(24) a. How far did Sue walk?
b. How far did the log roll?
c. *How far did the bullet whistle?
d. *How far did the train shudder?

The fact that *whistle* and *shudder* do not select for a Path explains why when the SC predicate is filled only by a trace, instead of a full PP, the interpretation is degraded and the sentences become ungrammatical.[viii] The PP in these cases is purely structurally licensed; the verb is inserted as a manner component to realize the BECOME operator.

3.2 Causatives of the four classes of motion verbs

Interestingly, each of these four classes behaves differently in causatives. In this section, we consider each of these motion verbs in a causative syntax, paying attention to whether the causing event and the caused event must occur contemporaneously (i.e. whether the *accompanied-motion* requirement holds).

First, [-Agent, -Path] verbs like *shudder* do not causativize, no matter whether the action of Agent is accompanying the motion event of the object:

(25) *[-Agent], [-Path]*
a. *Bill shuddered the shopping cart across the parking lot.
(e.g. by giving it a hard push).
[-accompanying]
b. *Bill shuddered the cart across the parking lot.
(e.g. walking along pushing it)
[+accompanying]

Second, [+Agent], [-Path] verbs like *whistle* causativize without the accompanied-motion reading (see Levin and Rappoport-Hovav 1999):

(26) [+Agent], [-Path]
a. Mary whistled Rover to her side.
[-accompanying]
b. ?? Mary whistled Rover down the path.
(where both Mary and Rover are going down the path)
[+accompanying]

Third, [-Agent], [+Path] verbs like *roll* again causativize both ways:

(27) *[-Agent], [+Path]*
a. The tide rolled the log up the beach.
[+accompanying]
b. Bill rolled the ball to the toddler.
[-accompanying]

Finally, [+Agent], [+Path] verbs causativize only in [+accompanied] readings

(28) *[+Agent], [+Path]*

a. *John walked the child onto the stage.
[-accompanying]
(e.g. he mimed walking confidently in the wings and then the child was encouraged and walked onstage herself).

b. Mary walked John to his house.
[+accompanying]

Notice that with this class of verbs, the agent's action doesn't have to be an *instance* of the motion described by the verb ((29)a-c below), nor does the object's ((29)d-e below). But crucially, the agent's action, whatever it is, must be *cotemporaneous* with the resultant motion event: it cannot be temporally dissociated from it, and the causing event and the motion event overlap totally in each case.

(29) a. The boy jumped the action figure across the table.
b. Sue ran the car into the wall.
c. John danced the puppet across the stage.
d. John ran the package to the office.
e. Mary walked the bicycle to the shop.

Below we provide a table summarizing the behavior of each class of verbs in the causative construction:

(30) Table 2

	Accompanied motion?	
Verb class	+accomp	-accomp
-Path, -Agent (*shudder*)	*	*
-Path, +Agent (*whistle*)	?	✓
+Path, +Agent *(walk*)	✓	*
+Path, -Agent (*roll*)	✓	✓

3.3. Table 2 and the Event-Path homomorphism requirement

The consideration of each case has given the following results. When a verb selects for neither an Agent nor a Path, a causative cannot be formed *(*Bill shuddered the cart across the parking lot*). When a verb selects for just an Agent, but not a Path, a causative may be formed. There is no required temporal overlap between manner and motion, and no accompanied-motion requirement (*Mary whistled Rover down the path*). When a verb selects for a Path but not an Agent, there is a required overlap between manner and motion (the event-path homomorphism), but there is no accompanied-motion requirement. When a verb selects for both an Agent and a Path, the required overlap between manner and motion extends to the Agent too, and results in an accompanied-motion requirement. [ix]

4. Intentionality

With non-Agent selecting manner verbs like *roll*, we see an interesting effect of intentionality. With an intentional subject, the motion event may be accompanied or not. With a non-intentional subject, the motion event must be accompanied

(31) a. The tide rolled the log up the beach.
(accompanied)
b. *The slope rolled the ball past Mary's house.
(not accompanied, bad)

In other words, when the external argument is a Causer, not an Agent, the homomorphism has to carry along the Causer — the dissociation between Cause and resultant event is in this case impossible.

Interestingly, a non-intentional Causer cannot be the subject of causatives containing either type of what we have called the Agent-selecting verbs:

(32) a. *The teakettle whistled Mary into the room.
b. *The wind walked the dog into the house.

Independently of whether the motion is accompanied or not, these causatives are impossible.

4.1 A sub-class of *run*-verbs: 'strong' manner of motion verbs

In this section, we consider briefly the case of verbs like *amble, saunter, stroll* which pattern with *run*, *walk, swim* in selecting an Agent and allowing a distance-measure:

(33) a. How far did John saunter?
b. How far did Mary stroll?

Unlike *run, walk, swim* on the other hand they sound very odd in causatives:

(34) a. #Mary strolled John home.
b. ?#Sue ambled the package to the office.

They are also unlike *run, walk, swim* in disallowing referential Path-denoting direct objects (Tenny 1995):

(35) a. Mary walked the Appalachian Trail.
b. Sue swam the English Channel.
c. #Mary ambled the Appalachian Trail.
d. #John strolled the Pacific Crest Trail.

This class represents a puzzle, because as things stand, we predict that these should be fine in causatives, and should behave like *walk* given that they select both an Agent and a Path. We speculate that although in principle they *should be* fine in causatives, the maximally internally-controlled nature of the manner they denote just makes it hard to find the right cases. This may be related to the variable behavior of internally caused verbs like *grow* (causativizable in English but not Italian) and *bloom* (not causativizable in either language).

5. Conclusions

The availability of a small-clause syntax is what allows for the occurrence of causative formation with verbs of manner of motion. The verb is late-inserted into the structure as a manner spell-out of the CAUSE head and the insertion is restricted by a requirement that the verbal meaning be relatable to the CAUSE head's meaning/selectional properties, hence ruling out causatives of *shudder*-verbs. When the verb selects for a Path, the manner described by the verb must extend for the duration of the resultant event, because an event-Path homomorphism effect is imposed. If the verb doesn't select for a Path, the manner need not extend for the duration of the resultant event — no event-Path homomorphism is imposed. When the verb *also* selects for an Agent, the Agent's action must also extend for the duration of the resultant event — the Agent becomes involved in the event-Path homomorphism, forcing the accompanied-motion reading.

Notes

[i] The (late) insertion of a root to spell-out the Manner of the change-of-state head in (b) or causative head in (c) is a process that is famously free in English but fettered in Romance (Talmy 1985 et seq.); this is a syntactic instantiation of Manner Incorporation, or what Jackendoff (1990:224) calls the 'GO-adjunct rule'

[ii] For extensive discussion of these facts in Dutch see Koopman (2001) and den Dikken (2003).

[iii] Sentences (8)b and (9)b are acceptable with a parenthetical interpretation

[iv] Zubizarreta and Oh (2004:Ch. 2, p9) give an example equivalent to (10b) as grammatical, but we find it degraded. They note (64, n. 2) that the *do-so* test does work cleanly for pure motion verbs like *go*: **John went into the house and Sue did so into the barn*. The variability may be due to the absence of any manner content for *go*, which makes it extremely odd to elide (it's already as 'light' as it can get).

[v] The problem with generally connecting unaccusativity to telicity is articulated clearly by Levin and Rappoport (1995: 172), and Hay, Kennedy and Levin (1999) with respect to examples like *The temperature decreased for/in an hour*; here we are concerned with the smaller claim that goal-of-motion constructions must be telic.

[vi] Zubizarreta and Oh 2004 use 'bounded' to mean something like 'scalar', 'gradable', equating it to Krifka's notion of non-divisive reference, thus distinguishing 'bounded' from 'telic'. We use 'bounded' as equivalent to 'telic' here and would use 'gradable' or 'scalar' for Z&O's 'bounded'. The difference between telic and atelic prepositions here is essentially equivalent to Kennedy 1999's distinction between closed-scale and open-scale gradable adjectives.

[vii] Note that agentivity is not, in this view, incompatible with an unaccusative syntax —the presence of *walk* as a manner element in structures like 6b above is fine, although there is no external argument. Even when modified by agent-oriented adverbs like *on purpose*, unaccusative diagnostics such as auxiliary selection give the same result:

(i) a.	Gianni é caduto/*ha caduto	apposta.		
	John is fallen / has fallen	on purpose.		
b.	Gianni é rotolato/*ha rotolato	giu	apposta.	
	John is rolled/has rolled	down	on purpose.	

(Although *rotolare* is better with *ha* than *cadere* is, this is due to the fact that *rotolare* is optionally transitive, so the *ha rotolare* sequence, while ungrammatical in this structure, is familiar from transitive constructions; it's a type of garden-path effect.)

[viii] The selected PP with verbs like *walk* and *roll* is D-linked, in the terms of Pesetsky (1987),

allowing reconstruction and interpretation of the questioned degree phrase.

[ix] The Path-relatedness of the constraint on accompanied-action readings exhibited here is crucially different from the selected-object constraint cotemoraneousness described by Rappaport and Levin 1999. There, they discuss verbs that do not select Paths or objects, like *wiggle*, and contrast them with verbs that select objects but not Paths, like *wipe*. Here, none of the verbs under consideration selects an object. The cotemporaneousness requirement we observe here, then, does not relate to object-selection, but rather Path-selection.

References

Bresnan, Joan. 1994. Locative inversion and the architecture of universal grammar. *Language*, **70**.1:2--131.

Dikken, Marcel den. 2003. On the syntax of locative and directional adpositional phrases. Unpublished ms., CUNY.

Folli, Raffaella. 2001. *Constructing telicity in English and Italian*. Ph.D. dissertation, University of Oxford.

Folli, Raffaella. & Harley, Heidi. 2002. *Waltzing Matilda around and around Threshold vs. endpoint sub-events',* paper presented at the *Konstanz Workshop on Sub-Events*.

Hale, Ken. & Keyser, Samuel J. 1993. On argument structure and the lexical expression of syntactic relations. In Hale, K. & Keyser, S.J. (eds.). *The view from building 20: essays in linguistics in honor of Sylvian Bromberger*. Cambridge Mass.: MIT Press. 53-109.

Hay, Jennifer, Kennedy, Christopher & Levin, Beth 1999. Scalar structure underlies telicity in 'degree achievements'. In T. Mathews & Strolovitch, D. (eds.) *Proceedings of SALT IX* . Ithaca: CLC Publications. 127-144.

Harley, Heidi. 2005. "How do verbs get their names? The aktionsart of denominal verbs and the ontology of verb roots in English." In *The Syntax of Aspect: Deriving Thematic and Aspectual Interpretation*, ed. by Nomi Erteschik-Shir and Tova Rapoport. Oxford University Press: Oxford.

Hoekstra, Teun & Mulder, Jan. 1990. Unergatives as copular verbs. *The Linguistic Review* **7**. 1-79.

Jackendoff, Ray. 1990. *Semantic Structures*. MIT Press: Cambridge.

Kennedy, Christopher. 1999. *Projecting the Adjective: The Syntax and Semantics of Gradability and Comparison*. Garland: New York.

Koopman, Hilda. 2000. Preposition, postpositions, circumpositions and particles. In: The Syntax of Specifiers and Heads. Collected Essays of Hilda Koopman. Routledge: London.

Krifka, Manfred. 1998. 'The origins of telicity,' in S. Rothstein (ed.), *Events and Grammar*. Dordrecht: Kluwer. 197-236.

Levin, Beth & Rappaport-Hovav Malka. 1995. Unaccusativity: at the syntax-lexical semantics interface. Cambridge, Mass.: MIT Press.

Levin, Beth & Rappoport-Hovav, Malka. 1999. "Two structures for compositionally derived events." *Proceedings of SALT 9*, 199-223. Ithaca, NY: Cornell Linguistics Circle Publications, Cornell University.

Pesetsky, David. 1987. "Wh-in-situ: Movement and unselective binding." In E. Reuland and A. ter Meulen, (eds.) *The Representation of (In)definiteness*, 98-129. Cambridge, MA: MIT Press.

Talmy, Leonard. 1985. Lexicalization patterns: semantic structure in lexical forms. In Shopen, T. (eds.) *Language typology and syntactic description III: grammatical categories and the lexicon.* Cambridge: Cambridge University Press. 57-149.

Tenny, Carol. 1987. *Grammaticalizing aspect and affectedness*. Ph.D. Dissertation, MIT.

Tenny, Carol. 1995. "Modularity in Thematic versus Aspectual Licensing: Paths and Moved Objects in Motion Verbs." *Canadian Journal of Linguistics* **40**.2: 201-234.

Tungseth, Mai. 2004. "PP, PathP and the telic/atelic distinction in Norwegian motion constructions. " In Slabakova, R. & Kempchinsky, P. (eds.) *Aspectual Inquiries.* Dordrecht: Kluwer.

Wechsler, Stephen. 2001. Resultatives under the Event-Argument Homomorphism Model of Telicity. Ms., University of Texas at Austin.

Zubizarreta, Maria Luisa, and Oh, Eunjeong. 2004. The lexicon-syntax interface: The case of motion verbs.

Raffaella Folli
Faculty of Modern & Medieval Languages
University of Cambridge
Sidgwick Avenue
CAMBRIDGE CB3 9DA
rf250@cam.ac.uk

Heidi Harley
Department of Linguistics
University of Arizona
Tucson, AZ 85721-0028
hharley@email.arizona.edu